Property Description
FROM NE COR OF SE 1/4 OF NE 1/4 OF SEC 07-39-19 TH
S 00-33-05 E 104.45 FT TH S 89-56 W 23.65 FT TH S
00-04 E 50 FT TH S 62-33-08 W 70.79 FT TO NELY R/W
Situs: 400 US 41 BYP N VENICE 34285

BB&T BANK
C/O BB&T PROPERTY TAX DEPT
PO BOX 167

2020

Parcel ID: 0407-09-0001

2350 Financial institutions (Retail

SARASOTA COUNTY PROPERTY APPRAISER
PROPERTY RECORD CARD

Building Characteristics

Category	Type	%	Mult.
Roof	HIP	100	1.0100
Exterior	STUCCO	100	1.0000
Frame	MASONRY OR	100	1.0000
Heat-Air	HEAT & AIR	100	1.0000
Interior Wall	DRYWALL	100	1.0000
Roof Material	ASPHALT OR	100	1.0000
Floors	CARPET,	80	0.8000
Floors	CERAMIC	20	0.2020
Wall Height	WH	100	1.0000
Size Index	SZ	100	0.9900
Quality Adj.	QA	100	1.4000
Total Adjustments			1.4027

SAR	Area	H	Rate	Cost New
PRM	4,229	X	154.30	652,535
CYF	1,720		30.86	53,079
CYE	596		92.68	55,237
PRM	323	X	154.30	49,839

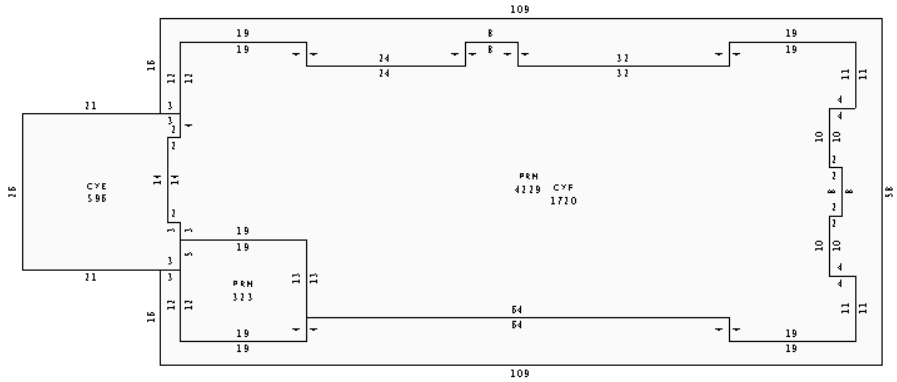

Sketch by Apex Sketch v5 Pro

Gross Area: 6,868 **Net/Living Area:** 4,552 **Building:** 1 of 1

Category	Units	Cost New
Bathrooms	2.00	0
Extra Fixtures	9.00	0
Fireplace	1.00	0
Number of Stories	1.00	0
Wall Height	14.00	0

Total Replacement Cost New:		810,692
Less Total Depr:	24.00%	194,566
Building Value:		616,126

Depreciation Adj.	Adj.
Average Condition	24.00%

Grade	Description	Nbhd Factor	Mkt Area Factor
C3	Commercial	1.0000	0

AYB	EYB	DT	% Good	Last Inspection
1974	1996	30	76.00%	04/30/2020 746

VALUE SUMMARY

VALUE SUMMARY	CURRENT	PRIOR YEAR
Building Value	$ 616,100	$ 624,200
Extra Feature Value	$ 12,100	$ 12,400
Land Value - Market	$ 691,600	$ 691,600
Land Value - Ag	$ 0	$ 0
TOTAL JUST VALUE	**$ 1,319,800**	**$ 1,328,200**
Values pertaining to County Assessment		
Assessed Value	$ 1,319,800	$ 1,328,200
Exemption Codes	None	None
Exemption Amount	$ 0	$ 0
Taxable Value	$ 1,319,800	$ 1,328,200

PARCEL DATA

Mkt Area	Nbhd	Sub	Lot SqFt	Zoning
206	2208.00	0000	34,199	CG

Sub Name: NOT PART OF A SUBDIVISION
Bldg Type: Bank-Branch

CONDOMINIUM INFORMATION

Floor #	Total Floors	Unit #	View

#	Instrument	Transfer Date	Consideration	Type	QC	QC Description	V/I	Grantor
1	2582/2223	12/17/1993	$1,735,000	WD	X2	Pre-2009	I	CROSSLAND SAVINGS FSB
2	UR00/0DOC	06/01/1984		NA	X2	Pre-2009	I	

Permit Information

Number	Date	Cost	Description
1304	03/23/2018	5,668	NEW/REPLACEMENT
940	03/07/2017	26,400	MINOR HVAC WORK-
1945	04/28/2016	865	BB&T FACE CHANGE

#	Code	Description	B#	Qty	Length	Width	Units	Unit Price	Grade	Cond	AYB	EYB	% Depr	Value	Notes
1	FENC	Fence,chain link 5	1	1	0	0	36.00	15.150	AVERAG	AV	1974	1974	39.971	218	
2	PARK	Parking Spaces	1	1	0	0	24.00	0.000	AVERAG		1974	1996	0.000	0	
3	PAVE	Asphalt paving	1	1	0	0	12,000.00	2.250	AVERAG	AV	1974	1974	42.500	11,475	
4	PAVE	Concrete paving	1	1	0	0	150.00	6.525	AVERAG	AV	1974	1974	42.503	416	

#	Land Type	Land Type Description	Land Use	Units	Unit Type	Base Unit Price	Nbhd Factor	Mkt Factor	Land Influences Code	Fact	Code	Fact	Code	Fact	Adj. Unit Price	Land Value
1	YB	Retail Banks	2350	25,909.00	S	18.00	1								26.68	691,382
2	UW	Submerged Land	2350	8,290.00	S	0.03	1								0.03	249

Parcel Notes

BB & T, BELOW ROAD GRADE - POOR VISIBILITY, CORNER SIGNALIZED INTERSECTION, SECONDARY ACCESS, 1 LANE
BB&T - LESS RD R/W 1/15/08 1 LANE DRIVE THRU + WALK UP ATM